Valve Box

TurfGro Standard Series 10” Round Valve Box & Cover (NDS Standard Series)

The TurfGro Standard Series 10” round valve boxes and covers are injection molded of structural foam polyolen material with a melt index between 10-12. Coloring and UV stabilizers are added, along with processing lubricants when needed. The 10” round body shall be tapered and have a minimum wall thickness of .200”. The cover seat area shall have 6 structural support ribs on the underside of the seat, each with a minimum thickness of .250”. The bottom of the body shall have a .500” ange. The 10” round cover shall have an average thickness of .250”.

Model: TGVB10RDBLK
Color: Black

Model: TGVB10RDTAN
Color: Tan

Model: TGVB10RD
Color: Green

Model Descriptions

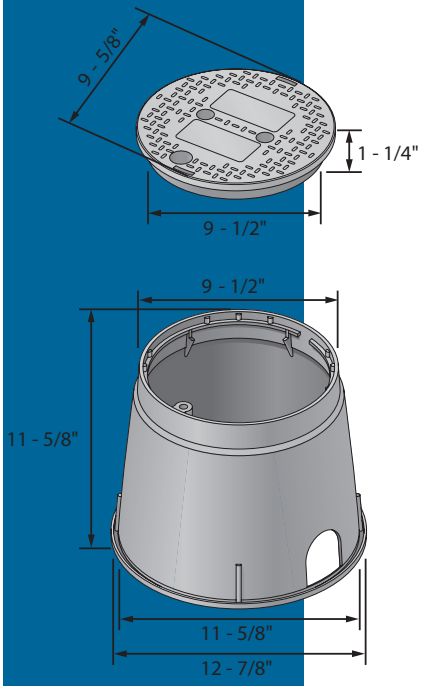

Product Code	TGVB10RDBLK	TGVB10RDTAN	TGVB10RD
Box Description	10” Round	10” Round	10” Round
Cover Description - Marking	Round Overlapping Box	Round Overlapping Box	Round Overlapping Box
Color (Box/Cover)	Black/Green	Sand/Sand	Green/Green
Pallet Qty	180	180	180
Weight EA	3.00	3.00	3.00
Shipping Configuration	**Box & Cover**	**Box & Cover**	**Box & Cover**
Pallet	180	180	180
Pieces per Stack	10	10	10
Stack per Pallet	25	25	25
Pallet Dimensions	40”x48”x35 1/2”	40”x48”x35 1/2”	40”x48”x35 1/2”
Properties of Unfoamed Resin			
	ASTM Test Method	Polyolefin	
Tensile Strength, Yield	ASTM D 638	3100-4400 PSI	
Density	ASTM D 792	.900-.956	
Notched Izod Impact Strength	ASTM D 256	4-15 ft. lbs/in.	
Heat Deflection Temperature @ 66 PSI, Degreees F.	ASTM D 648	165-212 degrees F.	

Product is not to be installed in concrete and is not to be used in vehicular applications. Weights and dimensions are nominal.

Available Exclusively at: Horizon